AURORA SEIKI

# CNC TURNING CENTER

Exceptional Rigidity
Highly Productive
Decidedly Efficient
Remarkably Cost Effective

FT series

Aurora Seiki Technologies Co.,Ltd.

M: + 886-918-122778
T : + 886-4-23307022
E : gavin@auroraseiki.com
A : No.10, Ln. 468, Wufu Rd., Wufeng Dist.,
Taichung City 413, Taiwan
www.auroraseiki.com

AMERIGO Machinery Co.

721 W. Breckinridge St.
Louisville, KY 40203 U.S.A
Office + 1 502.435.8036
sales@amerigomachinery.com
www.amerigomachinery.com


2018/09/1000

AURORA SEIKI

# CNC TURNING CENTER

## FT-100

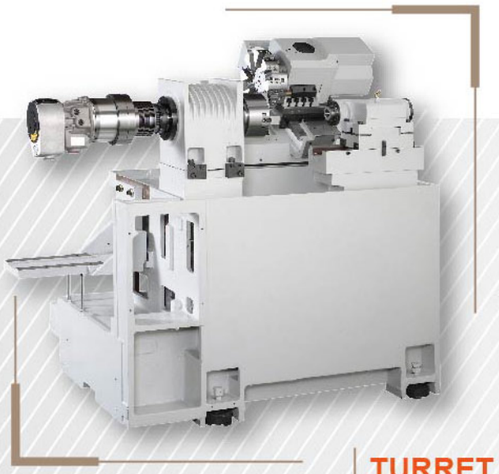

- One piece casting with 30° slant bed designed for superior strength and rigidity.
- High Quality Meehanite Castings for longevity and accuracy.

**TURRET**
- Suitable for heavy turning.

Tool Travel Drawing

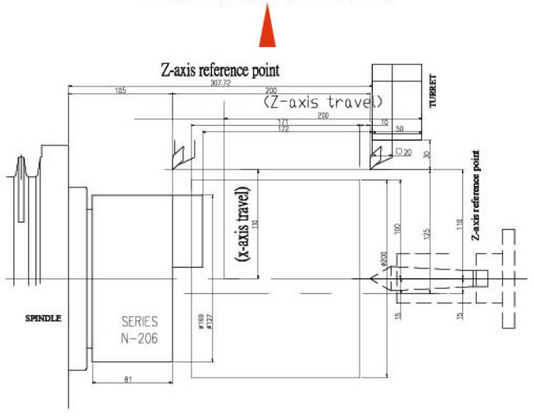


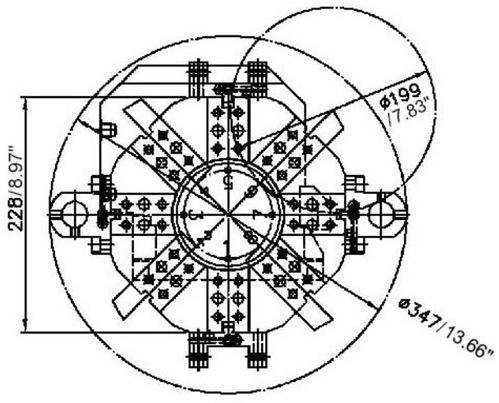


T8 Tool Interference Drawing



# CNC TURNING CENTER

## FT-200

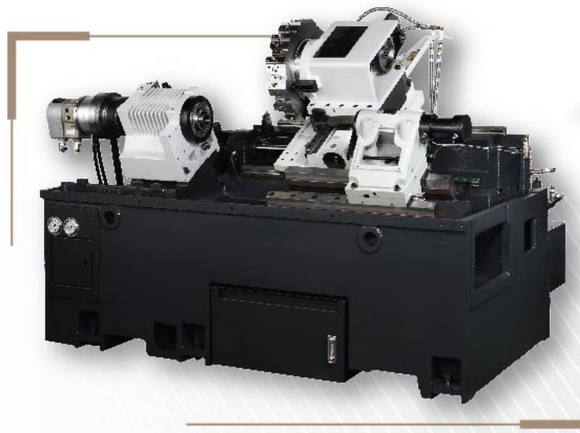

- One piece casting with true 30° slant bed design, exceptional thermal stability and accuracy through the life of the machine.

**TAILSTOCK**
- Heavy Duty Design and fully adjustable.
- Fine positioning adjustment for ensured accuracy.

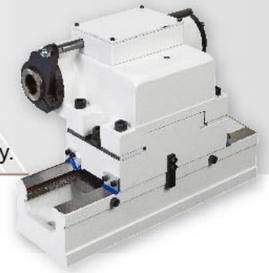

Tool Travel Drawing

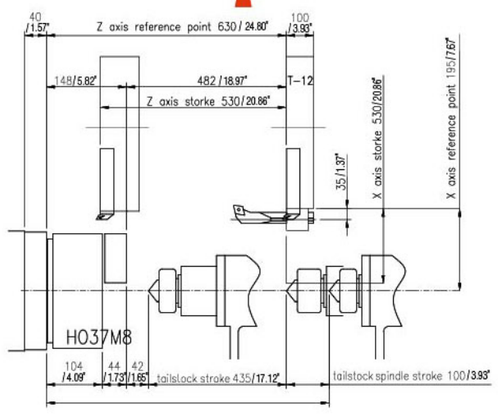


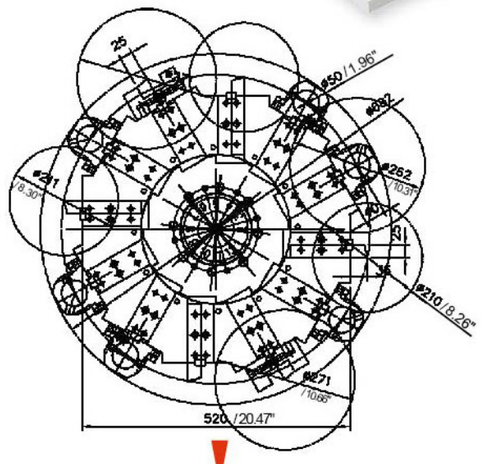


T12 Tool Interference Drawing

AURORA SEIKI

# C-axis CNC TURNING CENTER

## FT-200CS

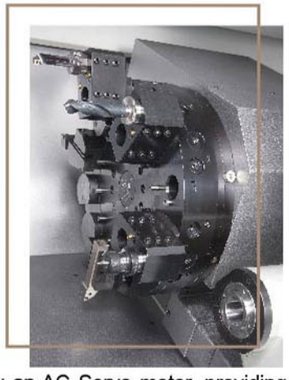

- C axis Spindle control and live turret combination simplify multi-tasking of complicated workpieces and minimizes errors due to additional set ups. C axis and Live Turret save processing time and manpower.
- The Live turret is driven by an AC Servo motor, providing excellent power and torque for heavy milling.

### PART CATCHER

- Effectively remove parts from work zone, eliminating workpiece damage.
- Suitable for continuous bar-feed operation.

### SPINDLE

- Heat Treated and Ground for High Accuracy and Durability.
- High Quality NSK Spindle bearings ensure minimal thermal deformation and improved performance.
- Excellent for high speed precision turning and low speed heavy cutting.

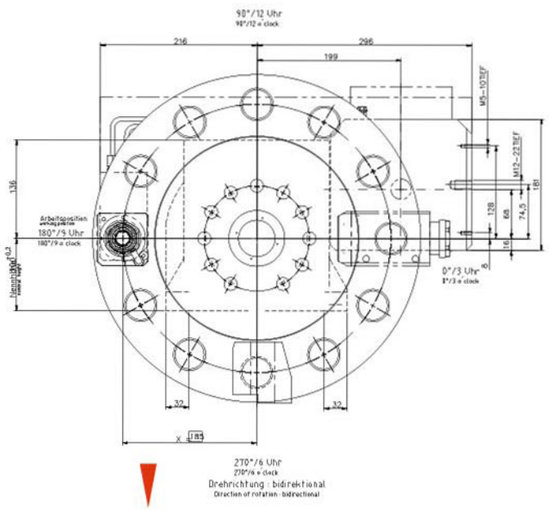

T12 Tool Interference Drawing



# CNC TURNING CENTER

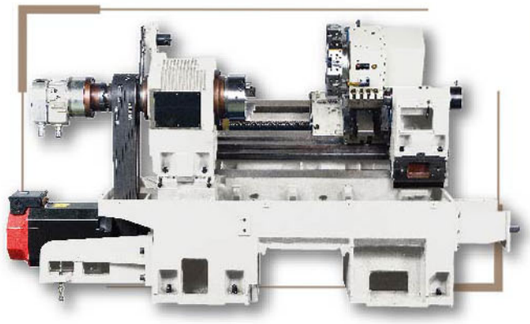

## FT-300

- One piece Casting design for superior dampening and stability.
- True Slant bed design for longevity and repeatability.

### TOOL PROBE

- Ensures tool setting accuracy, eliminates manual setting.
- Increase's productivity for tooling change over time.

### AUTO BAR FEEDER

- Allows Automatic loading of bar stock for increased through put and decreased cycle time.
- Easy operation and programming.

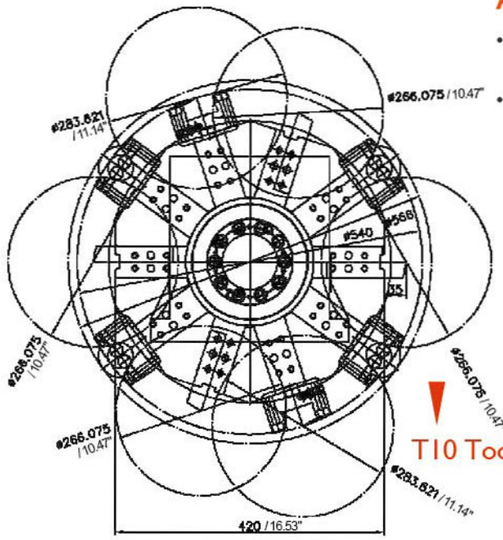

T10 Tool Interference Drawing

AURORA SEIKI

# SPECIFICATIONS

| MODEL | Unit | FT-100 | FT-150 | FT-200 | FT-250 | FT-200CS | FT-300 | FT-300L |
|---|---|---|---|---|---|---|---|---|
| **CNC Lathe** | | | | | | | | |
| Type | | Box way | | Box / Linear way | | Box / Linear way | Box way | |
| Body type | | Slant | | Slant | | Slant | Slant | |
| Fanuc controller | | 0i-TF | | 0i-TF | | 0i-TF | 0i-TF | |
| Spindle motor | | β6 | β8 | β12 | | αP15 | αP30 | |
| Hydraulic 3-jaw chuck | | 6" | 8" | 8" | | 8" | 10" | |
| **Capacity** | | | | | | | | |
| Swing over bed | mm/inch | 400 / 15.74" | | 480 / 18.89" | | 450 / 17.71" | 670 / 26.37" | |
| Standard turning dia. | mm/inch | 150 / 5.90" | 200 / 7.87" | 216 / 8.49" | | 216 / 8.49" | 290 / 11.41" | |
| Max. turning dia. | mm/inch | 250 / 9.84" | | 320 / 12.60" | | 250 / 9.84" | 400 / 15.74" | |
| Max. turning length | mm/inch | 175 / 6.88" | 150 / 5.90" | 530 / 20.86" | 780 / 30.70" | 420 / 16.53" | 560 / 22.04" | 960 / 37.79" |
| **Axis travel** | | | | | | | | |
| Bar diameter | mm/inch | 42 / 1.65" | 52 / 2.04" | 52 / 2.04" | | 52 / 2.04" | 78 / 3.07" | |
| X-Axis travel | mm/inch | 220 / 8.66" | | 370 / 14.56" | | 330 / 12.99" | 470 / 18.50" | |
| Z-Axis travel | mm/inch | 200 / 7.87" | | 530 / 20.86" | 780 / 30.70" | 420 / 16.53" | 600 / 23.62" | 1,000 / 39.37" |
| **Spindle** | | | | | | | | |
| Spindle bore | mm/inch | 53 / 2.08" | 61 / 2.40" | 65 / 2.55" | 65 / 2.55" / 91 / 3.58" | 63 / 2.48" | 86 / 3.38" | |
| Spindle nose | | A2-5 | A2-6 | A2-6 | A2-6 / A2-8 | A2-6 | A2-8 | |
| Max. Spindle speed | RPM | 6,000 | 4,000 | 4,000 | 4,000 / 4,000 | 4,000 | 2,500 | |
| **Turret** | | | | | | | | |
| Turret capacity | | 8 | | 10 / 12 | | 12 | 8 / 10 | |
| Height of square tool | mm/inch | 20 / .750" | | 25 / 1.0" | | 25 / 1.0" | 25 / 1.0" | |
| Boring bar holder dia. | mm/inch | 20 / .750" | | 40 / 1.5" | | 40 / 1.5" | 40 / 1.5" | |
| Indexing time (tool-tool) | sec | 0.10 | | 0.70 | 0.14 | 0.28 | | |
| Total indexing time for 180° | sec | 0.40 | | 0.70 | 0.10 | 0.58 | | |
| **Tailstock** | | | | | | | | |
| Tail sleeve diameter | mm/inch | 60 / 2.36" | | 90 / 3.54" | | 90 / 3.54" | 85 / 3.34" | |
| Tail sleeve taper | mm/inch | MT#4 | | MT#5 | | MT#5 | MT#5 | |
| Tailstock travel | mm/inch | 130 / 5.11" | | 435 / 17.12" | 685 / 26.96" | 435 / 17.12" | 390 / 15.35" | |
| Tailstock quill travel | mm/inch | 75 / 2.98" | | 100 / 3.93" | | 100 / 3.93" | 120 / 4.72" | |
| **Rapid** | | | | | | | | |
| Rapid feed speed | m/inch | X:20, Z:20 / X:787, Z:787 | | X:20, Z:24 / X:787, Z:944 | | X:20, Z:24 / X:787, Z:944 | X:20, Z:24 / X:787, Z:944 | |
| **Motor** | | | | | | | | |
| Spindle motor | KW/HP | 5.5 / 7.3 hp / 7.5 / 10 hp | 7.5 / 10 hp / 11 / 14 hp | 11 / 14 hp / 15 / 20 hp | | 7.5 / 10 hp / 11 / 14 hp | 15 / 20 hp / 18.5 / 24 hp | |
| Feed motor | KW/HP | X:1.2, Z:1.2 / X:1.6 hp, Z:1.6 hp | | X:1.8, Z:2.5 / X:2.4hp, Z:3.35 hp | | X:2.5, Z:2.5 / X:3.35 hp, Z:3.35hp | X:3.0, Z:4.0 / X:4 hp, Z:5.36 hp | |
| Cutting oil motor | KW/HP | 0.25 / .33 hp | | 0.37 / .4 hp | | 0.37 / .4 hp | 0.55 / .7hp | |
| Hydraulic motor | KW/HP | 0.75 / 1 hp | | 1.5 / 2 hp | | 1.5 / 2 hp | 1.5 / 2 hp | |
| Servo turret motor | KW/HP | 0.75 / 1 hp | | 1.2 / 1.6 hp | | 1.2 / 1.6 hp | 1.2 / 1.6 hp | |
| **Oil tank capacity** | | | | | | | | |
| Lubricating oil | L | 1.8 / .4 gal | | 1.8 / .4gal | | 1.8 / .4 gal | 1.8 / .4 gal | |
| Cutting oil | L | 40 / 10 gal | | 200 / 52 gal | | 200 / 52 gal | 160 / 42 gal | |
| Hydraulic oil | L | 20 / 5 gal | | 50 / 13 gal | | 50 / 13 gal | 60 / 15 gal | |
| **Power** | | | | | | | | |
| Electric power | KVA | 12 | 15 | 22 | | 22 | 31 | |
| **CNC lathe size( Length x Width x Height )** | cm/inch | 175*158*180 / 68.8"*62.2"*70.8" | | 295*160*185 / 116.1"*62.9"*72.8" | 325*160*185 / 127.9"*62.9"*72.8" | 330*160*185 / 129.9"*62.9"*72.8" | 378*183*182 / 148.4"*72"*71.6" | 428*183*182 / 168.5"*72"*71.6" |
| **Net weight** | kgs/lbs | 2,400 / 5,291 lbs | | 4,100 / 9,038 lbs | 4,350 / 9,590 lbs | 4,100 / 9,038 lbs | 5,350 / 11,794 lbs | 5,920 / 13,051 lbs |
| **Pallet size( Length x Width x Height )** | cm/inch | 227*190*206 / 89.3"*74.8"*81.1" | | 258*229*223 / 101.5"*90.1"*87.7" | 288*229*223 / 113.3"*90.1"*87.7" | 288*229*223 / 113.3"*90.1"*87.7" | 418*229*224 / 164.5"*90.1"*88.1" | 465*229*224 / 183"*90.1"*88.1" |

## Standard Accessories

- Heavy Duty Box Way Construction
- Fanuc Controls, Drives, & Motors
- Side Exit Chip Conveyor
- Hydraulic Chucking System
- Servo Driven Turret
- Pre-Tensioned Ballscrews
- Auto Lubricating System
- Heat Exchanger on Electrical Cabinet
- Work Light
- Turret ID Tool Holder Blocks
- Turret ID Bushing Kit
- Tool Box with Tool Kit
- Door Interlock
- Fully Enclosed Splash Guard
- Instruction Manuals

## Optional Accessories

- Auto door
- Auto bar feeder
- Parts catcher
- Air-conditioner
- Tool probe
- Oil skimmer
- Tool holder 0/90 angle