AURORA SEIKI

Vertical Machining Center

Exceptional Rigidity,
Highly Productive,
Decidedly Efficient,
Remarkably Cost-Effective.

F series

Aurora Seiki Technologies Co.,Ltd.

M: +886-918-122778
T : + 886-4-23307022
E : gavin@auroraseiki.com
A : No.10, Ln. 468, Wufu Rd., Wufeng Dist.,
Taichung City 413, Taiwan
www.auroraseiki.com

AMERIGO Machinery Co.

721 W. Breckinridge St.
Louisville, KY40203 U.S.A
Office +1 502.435.8036
sales@amerigomachinery.com
www.amerigomachinery.com

2017/08/1000

AURORA SEIKI

Your Competent Partner

High Performing, Powerful Machining Center

Inner-Ribbed Meehanite Castings are used on all structural components, Providing Excellent Harmonic Dampening Properties.

Ensuring Predictable Results:

- Excellent Long Term Performance
- High Efficiency Production
- Reliable Stability thru Quality of Design

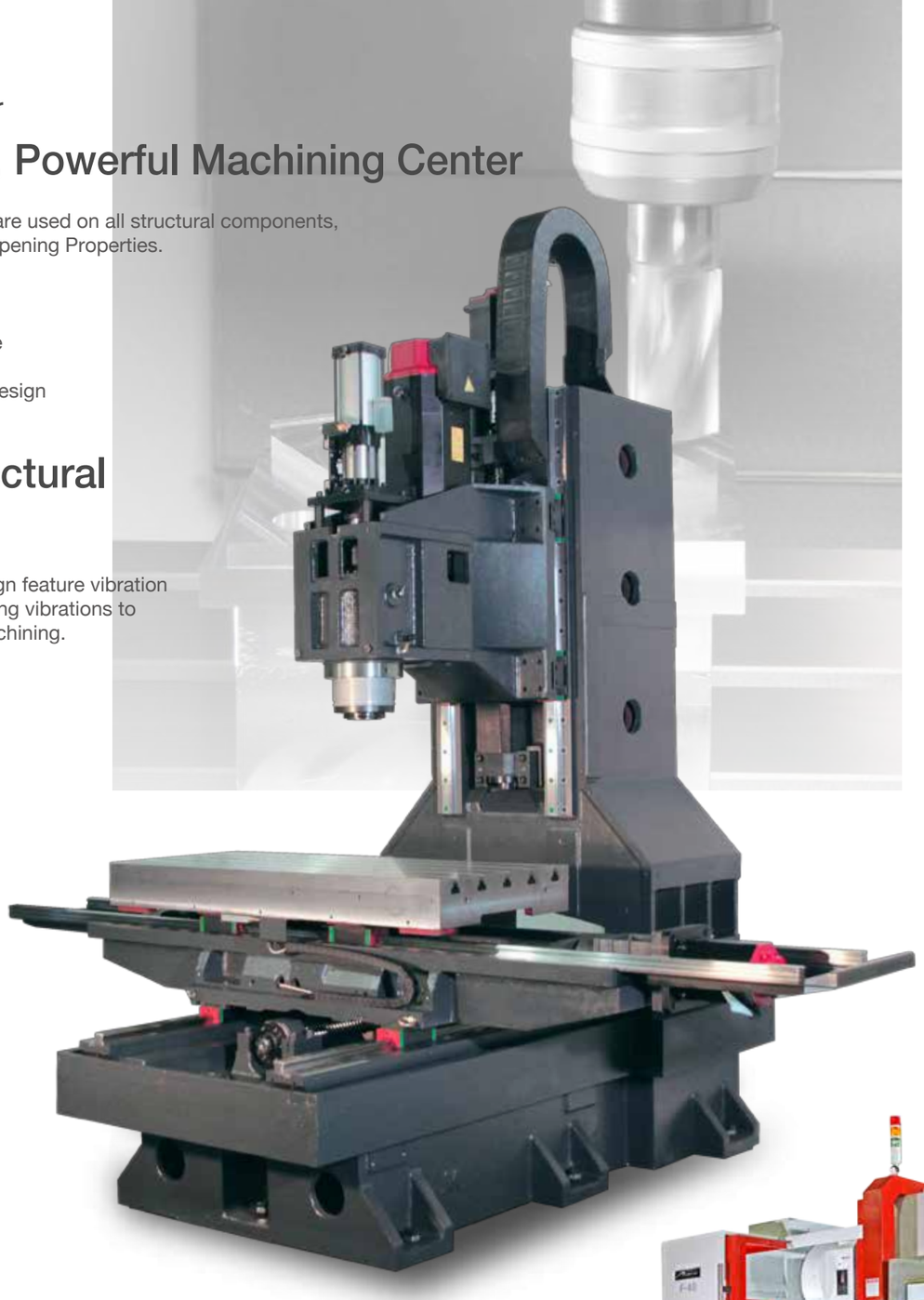

Highly Rigid Structural Frame Design

The base and column casting design feature vibration absorbing inner-ribs, allowing cutting vibrations to transfer away from the point of machining.

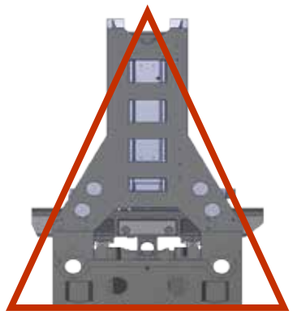

A Shaped Structure

Wide-Stance Column and Base Design.
The “A” shaped column and base design allow excellent dampening characteristics for heavy duty machining.

High Rigidity, High Accuracy

Machine Features

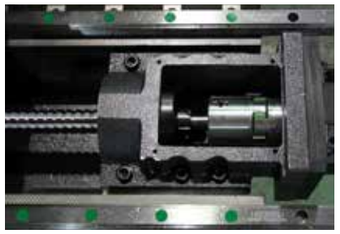

Direct-coupled servo motor and Ballscrews

The “F” series machines utilize direct coupled Servo motors and ballscrews. Servo motors directly couple to the ballscrews through a non-backlash steel coupling. Motors and ballscrews are center of mass mounted and supported on both ends. This single pre-tensioned design provides reliable positioning and repeatability

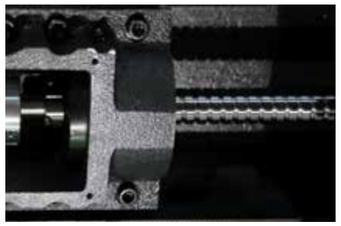

Linear Guideways

The “F” Series machines are designed using linear guideways for each axis.
Linear guideways have a very low coefficient of friction, allowing faster rapids without sacrificing repeatability or positioning accuracy!

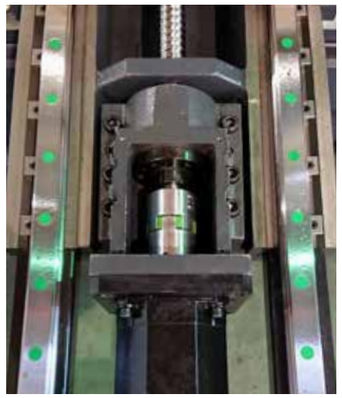

Rear Mounted Y-axis servo motor allows greater access for maintenance

High quality spindle

10,000 RPM SINDLE

The specific design of the bearing layout ensures maximum rigidity of the belt drive spindle.

Max. Speed	Standard	Optional
10,000 rpm (Std.)	CAT-40	CTS
15,000 rpm (Opt.)	CAT-40	CTS

Dual-contact (BIG-PLUS)

Spindle cooling system

To reduce Y axis thermal growth a closed loop, self-contained spindle chiller is included as standard.

Coolant tank

Large capacity coolant tray with mesh filter to prevent chips from entering coolant tank and pump. Chip Conveyor and Bucket are included as standard.

Tool management

Equipped with standard arm type tool changer. Tool to Tool time is 2 seconds. Chip to Chip time is 3.6 seconds. ATC is controlled by separate PLC with inverter drive and absolute position encoder providing superior durability, less maintenance, and a simple recovery.

Spindle output and torque chart

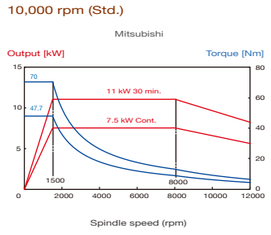

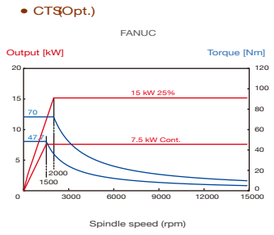

Operator convenience

FANUC Advanced cnc controllers

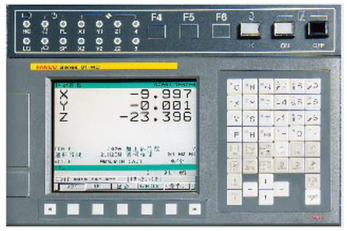

FANUC

Safety & convenience

Safety Glass Windows provide excellent operator protection. The front door opening allows overhead loading onto the table surface. The side door openings are below the table surface and larger than the Y axis travel.

Cutting Capacity Example

FANUC: αil12/10000 11/15 kW

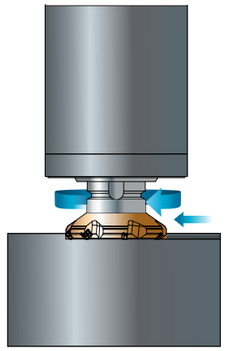

Face mill	S45C
Tool	Ø 80x6T/3.1”
Spindle speed	1,493 rpm
Feedrate	2,240 mm/min/88ipm
Cutting width	2.55 inch
Cutting depth	0.12 inch
Chip quantity	465 cc /min

Face mill	ADC12
Tool	Ø 80x6T/3.1”
Spindle speed	4,478 rpm
Feedrate	6,178 mm/243ipm
Cutting width	2.55 inch
Cutting depth	0.14 inch
Chip quantity	1,659 cc /min

Drill	S45C
Tool	Ø 32/1.25”
Spindle speed	248 rpm
Feedrate	0.3 mm/rev/ 01”/Rev
Hole depth	1.96 inch

Tap	S45C
Tool	M24x3P
Spindle speed	133 rpm
Thread depth	1.77 inch

Please notice the cutting data is just for reference. Different tools and spindle motors will influence the realistic performance results.

Specification

MODEL		F-23	F-30	F-32	F-40	F-45		F-53	
TRAVEL		CAT40	CAT40	CAT40	CAT40	CAT40	CAT50	CAT40	CAT50
X Axis Travel	mm/inch	580 / 23	760 / 30	820 / 32.2	1020 / 40	1150 / 45		1350 / 53	
Y Axis Travel	mm/inch	420/16.5	420/16.5	520 / 20.5	520 / 20.5	660 / 26		660 / 26	
Z Axis Travel	mm/inch	510/20	510/20	505 / 20	505 / 20	660 / 26		660 / 26	
Spindle Nose To Table Surface	mm/inch	80 - 590 / 3.1 ~ 23.2	80 - 590 / 3.1 ~ 23.2	100 - 605 / 3.9 -23.8	100 - 605 / 3.9 -23.8	135 – 795 / 5.3 - 31.2		135 – 795 / 5.3 - 31.2	
Spindel Center To Column Surface	mm/inch	455 / 17.9	455 / 17.9	560 / 22	560 / 22	715 / 28.2		715 / 28.2	
Table Surface To Floor	mm/inch	820 / 32.2	820 / 32.2	920 / 36.2	920 / 36.2	960 / 37.7		960 / 37.7	
Table Center To Column Surface	mm/inch	245 - 665 / 9.6 - 26.1	245 - 665 / 9.6 - 26.1	300 - 820 / 11.8 - 32.2	300 - 820 / 11.8 - 32.2	385 – 1045 / 15.2 - 41.2		385 – 1045 / 15.2 - 41.2	
TABLE									
Table Dimension	mm/inch	650 × 420 / 25.5 × 16.5	890 × 420 / 35 × 16.5	950 × 520 / 37.4 × 20.5	1150 x 520 / 45.2 x 20.5	1300 × 600 / 51 × 23.6		1500 × 600 / 59 × 23.6	
Max. Loading Weight	kg/lbs	300 / 661	300 / 661	800 / 1763	800 / 1763	1500 / 3306		1500 / 3306	
T - Slots（W×NO.×P）	mm/inch	14 × 4 × 100 / .5 ×.15 × 3.9	14 × 4 × 100 / .5 ×.15 × 3.9	18 × 5 × 100 / .7 ×.19 × 3.9	18 × 5 × 100 / .7 ×.19 × 3.9	18 × 5 × 100 / .7 ×.19 × 3.9		18 × 5 × 100 / .7 ×.19 × 3.9	
SPINDLE									
Spindle Speed	rpm	10000	10000	10000	10000	10000	6000	10000	6000
Spindle Taper		7/24 taper No.40	7/24 taper No.40	7 / 24 taper No.40	7 / 24 taper No.40	7 / 24 taper No.40	7 / 24 taper No.50	7 / 24 taper No.40	7 / 24 taper No.50
Dia. Of Spindle	mm/inch	Ø 60 / 2.3	Ø 60 / 2.3	Φ70 / Φ2.7	Φ70 / Φ2.7	Φ70 / Φ2.7	Φ100 / Φ3.9	Φ70 / Φ2.7	Φ100 / Φ3.9
Spindle Motor	kw/ HP	7.5 / 11 (10 / 15)	7.5 / 11 (10 / 15)	7.5 / 11 (10 / 15)	7.5 / 11 (10 / 15)	11 / 15 (15 / 21)		11 / 15 (15 / 21)	
FEEDRATE									
Rapid Traverse X Axis	m/min/ipm	36 / 1417	36 / 1417	36 / 1417	36 / 1417	36 / 1417		36 / 1417	
Rapid Traverse Y Axis	m/min/ipm	36 / 1417	36 / 1417	36 / 1417	36 / 1417	36 / 1417		36 / 1417	
Rapid Traverse Z Axis	m/min/ipm	36 / 1417	36 / 1417	36 / 1417	36 / 1417	36 / 1417		36 / 1417	
AUTOMATIC TOOL CHANGER									
Tool Changing Time (Tool-to-Tool) Carrousel Type		7 sec / 60Hz, 7.1 sec / 50Hz	7 sec / 60Hz, 7.1 sec / 50Hz	7 sec / 60Hz, 7.1 sec / 50Hz	7 sec / 60Hz, 7.1 sec / 50Hz	7 sec / 60Hz, 7.1 sec / 50Hz		7 sec / 60Hz, 7.1 sec / 50Hz	
Tool Changing Time (Tool-to-Tool) Arm Type		1.7 sec / 60Hz, 2.0 sec / 50Hz	1.7 sec / 60Hz, 2.0 sec / 50Hz	1.7 sec / 60Hz, 2.0 sec / 50Hz	1.7 sec / 60Hz, 2.0 sec / 50Hz	1.7 sec / 60Hz, 2.0 sec / 50Hz		1.7 sec / 60Hz, 2.0 sec / 50Hz	
Tool Changer	type	Arm	Arm	Arm	Arm	Arm	Arm	Arm	Arm
No. of Tools		24	24	24	24	30	24	30	24
Pull Stud		P-40T (45°)	P-40T (45°)	P-40T(45°)	P-40T(45°)	P-40T(45°)	P-40T(45°)	P-40T(45°)	P-40T(45°)
Max. Tool Weight	kg/lbs	7 / 15.4	7 / 15.4	8 / 17.6	8 / 17.6	8 / 17.6	15 / 33	8 / 17.6	15 / 33
Max. Tool Length	mm/inch	250 / 9.8	250 / 9.8	300 / 11.8	300 / 11.8	300 / 11.8	300 / 11.8	300 / 11.8	300 / 11.8
Max. Tool Diameter	mm/inch	Ø 80 / Ø 3.1	Ø 80 / Ø 3.1	Ø 80 / Ø 3.1	Ø 80 / Ø 3.1	Ø 80 / Ø 3.1	Ø100 / Ø3.9	Ø 80 / Ø 3.1	Ø100 / Ø3.9
Max. Tool Diameter (No Adjacent Tool)	mm/inch	Ø 150 / Ø 5.9	Ø 150 / Ø 5.9	Ø 150 / Ø 5.9	Ø 150 / Ø 5.9	Ø 150 / Ø 5.9	Ø200 / Ø7.8	Ø 150 / Ø 5.9	Ø200 / Ø7.8
OTHER									
Floor Space	mm/inch	1900 × 2255 / 74.8 × 88.8	2300 × 2255 / 90 × 88.8	2700× 2260 / 106.3 × 89	2900 × 2260 / 114.2 × 89	3400 × 2750 / 133.9×108.3		3800 × 2750 /150 × 108.3	
Machine Weight	kg/lbs	3000 / 6613	3500 / 7716	5500 / 12125	5800 / 12786	6800 / 14991		7500 / 16534	
Max. Machine Height	mm/inch	2370 / 93.3	2370 / 93.3	2800 / 110	2800 / 110	3100 / 122		3100 / 122	
Power Capacity	KVA	25	25	25	25	30		30	
Air Source	kg/cm^2/PSI	6 ~ 8 / 85 ~ 113	6 ~ 8 / 85 ~ 113	6 ~ 8 / 85 ~ 113	6 ~ 8 / 85 ~ 113	6 ~ 8 / 85 ~ 113		6 ~ 8 / 85 ~ 113	

STANDARD ACCESSORIES

Heat exchanger on electrical cabinet
.Closed loop spindle chiller
.8.4 LCD monitor
.Chip Converyor with bucket
4th exis prop
.8 m code functions
.Leveling feet and pads
.3 axes pretensioned ballscrews
.Automatic lubrication system
.Fully enclosed splash guard
.Dust-proof electrical cabinet
.Spindle air sealing
.3-color signal light
.Rigid Tapping
.Spindle coolant nozzle
.Operation and maintenance manual

OPTIONAL ACCESSORIES

.3 axes linear scales
.Coolant through spindle
.Workpiece measurement system
.Automatic tool length measurement and breakage detection
.Flushing system +coolant gun
.Front flushing
.Top roof
.High pressure pump
.Auto power off
.12,000rpm Belt type spindle BT-40
.10,000rpm DDS spindle

Machine dimension

F-23
F-30

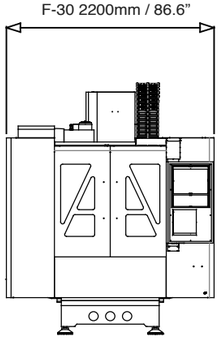

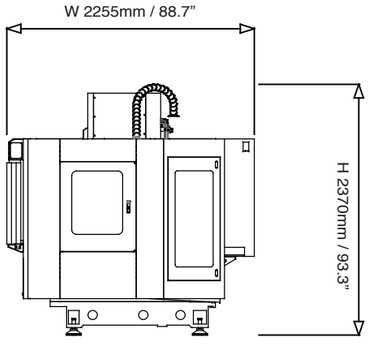

F-32
F-40

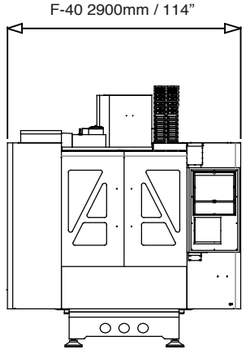

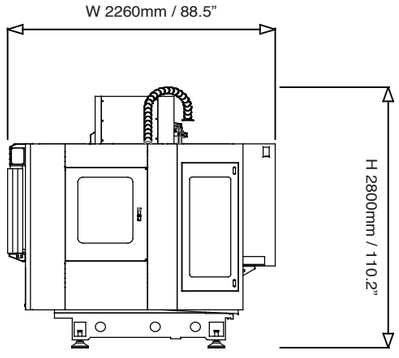
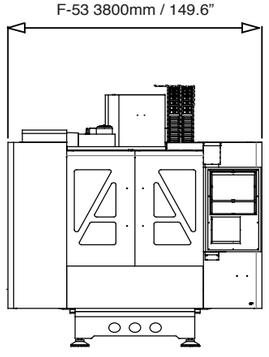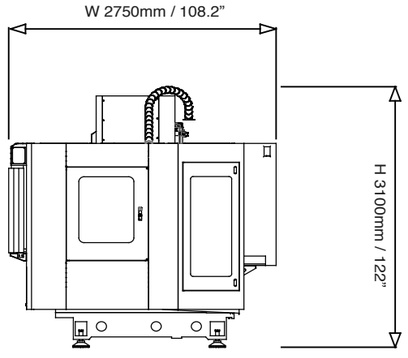
F-45
F-53